BLANK PATCH PANEL
12 PORT, MINI

VERTICAL CABLE
Simply **Connect.**

043-381/12M

DESCRIPTION

Mini 12 Port Blank Patch Panel.
10-inches, 1U.

FEATURES

- Constructed from heavy-duty 16-gauge steel.
- ABS UL94-V-0 high-impact, fire-retardant material.
- Durable black powder coat finish.
- Includes mounting bracket.
- Includes bezels for inserts.

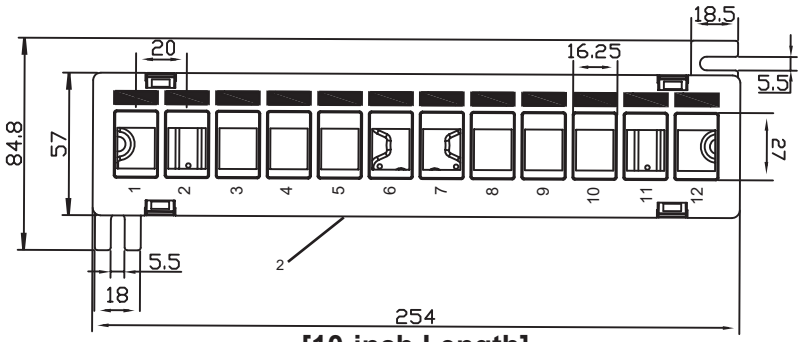

[10-inch Length]

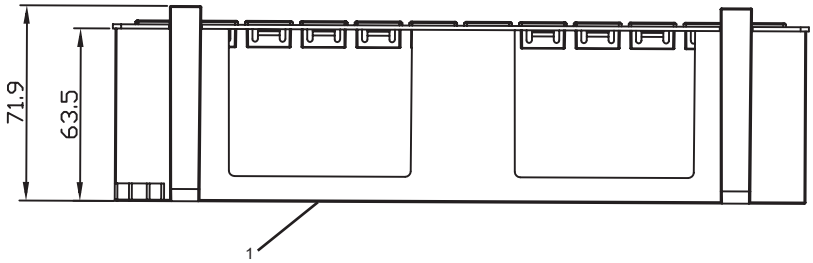

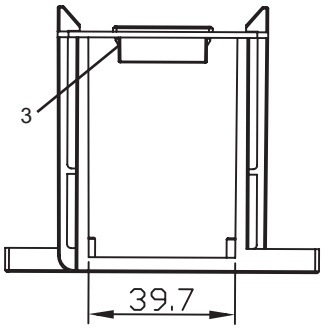

*Measurements in mm

Material:
1. Panel Bracket: ABS, UL94V-0
2. SPCC, 1.5 mm thickness
3. ABS, UL94V-0

VERTICAL CABLE
951.696.7772 California
800.749.2447 Florida
845.391.8318 New York
713.322.7242 Texas